DC

ISOMETER® isoCHA425HV

Insulation monitoring device with coupling device AGH420-1/AGH421-1 for unearthed DC systems 0 V to 1000 V suitable for DC charging stations according to CCS or CHAdeMO

BENDER

ISOMETER® isoCHA425HV

Insulation monitoring device with coupling device AGH420-1/ AGH421-1 for unearthed DC systems 0 V to 1000 V suitable for DC charging stations according to CCS or CHAdeMO

Intended use

The ISOMETER® isoCHA425HV in combination with the AGH420-1/AGH421-1 coupling device monitors the insulation resistance R_F for DC fast charging stations according to the CHAdeMO standard or according to the Combined Charging System (CCS) for nominal system voltage ranges between DC 0 V and 1000 V.

In order to meet the requirements of the applicable standards, customised parameter settings must be made on the equipment in order to adapt it to local equipment and operating conditions. Please heed the limits of the range of application indicated in the technical data.

Any other use or a use that goes beyond this constitutes improper use.

i To ensure that the ISOMETER® functions correctly, an internal resistance of ≤ 1 kΩ must exist between L1/+ and L2/– via the source (e.g. PSU) or the load.

i If the ISOMETER® is installed inside a control cabinet, the insulation fault message must be audible and/or visible to attract attention.

Device features

- Monitoring of the insulation resistance R_F of DC charging stations in accordance with the CHAdeMO standard or Combined Charging System (CCS)
- Measuring the system leakage capacitance C_e
- Measuring the system voltage U_n (True-RMS) with undervoltage/overvoltage detection
- Measuring the DC residual voltages U_{L1e} (L1/+ to PE) and U_{L2e} (L2/– to PE)
- Selectable start-up delay, response delay and delay on release
- Two separately adjustable response value ranges from 5…600 kΩ (prewarning, alarm)
- Alarm output via LEDs (“AL1”, “AL2”), display, and alarm relays (“K1”, “K2”)
- Automatic device self test with connection monitoring
- Selectable n/c or n/o relay operation
- Measured value indication via multi-functional LC display
- Activatable fault memory
- RS-485 (galvanically isolated) including the following protocols:
  - BMS (Bender measuring device interface) for the data exchange with other Bender devices
  - Modbus RTU
  - IsoData (for continuous data output)
- Password protection against unauthorised changing of parameters
- Stop mode for disabling the measuring pulse generator and in combination with AGH421-1 disconnection from the monitored system.

Functional description

The ISOMETER® is designed for use in DC charging stations according to CHAdeMo standard or Combined Charging System (CCS) and can be set to the respective mode in the "SEt" menu via the Mode parameter.

It measures:

- the total insulation resistance R_{FS}
- the one-sided insulation resistance R_{FU}
- the system leakage capacitance C_e
- the system voltage U_n (True RMS) between L1/+ and L2/–
- the DC system voltages (residual voltages) U_{L1e} and U_{L2e} between L1/+ as well as L2/– and earth

Depending on the selected mode, R_{FS} and R_{FU} are combined to the value R_F. For R_F a prewarning and an alarm limit value can be set in the "AL" menu. The prewarning limit value can only be set higher than the alarm limit value. If the measured value reaches or falls below the limit values, an alarm is signalled. For the measured value U_n an overvoltage and undervoltage limit value can be enabled and adjusted, the violation of which triggers an alarm. The limit value alarms are deleted when the respective measured value no longer violates the limit value including the corresponding hysteresis.

All alarms generated by the ISOMETER® are signalled via the LEDs "AL1" and "AL2". In the "out" menu, the alarms can be assigned to the alarm relays ("K1", "K2"). In addition, the operation of the alarm relays (n.o./n.c.) can be configured and the fault memory "M" can be activated or deactivated. If the fault memory is activated, the alarm relays remain in alarm condition until the reset button "R" is pressed or the supply voltage U_s is interrupted.

In the "t" menu, the start-up delay at device start, the response delay and the delay on message release as well as the repetition time of the automatic device self test can be set.

For the RS-485 interface, the protocols BMS, Modbus RTU or isoData are selected in the "out" menu. The measured values can be read and the parameters of the ISOMETER® can be set via the BMS protocols, e.g. using the BMS Ethernet gateway (COM465IP) and Modbus RTU. If the isoData protocol is selected, the ISOMETER® only sends the measured values, once per second.

The device function can be tested using the test button "T".

The device parameters are set via the LC display and via the control buttons on the front panel. This function can be password-protected.

The ISOMETER® can be set to stop mode to deactivate the measuring pulse generator. Using the AGH421-1, stop mode also disconnects the ISOMETER® from the monitored system.

Digital interface

The ISOMETER® uses the serial hardware interface RS-485 with the following protocols:

- **BMS**
  The BMS protocol is an essential component of the Bender measuring device interface (BMS bus protocol). Data transmission generally makes use of ASCII characters.
- **Modbus RTU**
  Modbus RTU is an application layer messaging protocol, and it provides master/slave communication between devices that are connected via bus systems and networks. Modbus RTU messages have a 16-bit CRC (cyclic redundant checksum), which guarantees reliability.
- **IsoData**
  The ISOMETER® sends an ASCII data string with a cycle of approximately 1 second. Communication with the ISOMETER® in this mode is not possible, and no additional sender may be connected via the RS-485 bus cable. The ASCII data string for the ISOMETER® is described in the chapter "IsoData data string" in the manual.

  i The IsoData protocol can be terminated by sending the command "Adr3" during a transmission pause of the ISOMETER®.

The parameter address, baud rate and parity for the interface protocols are configured in the "out" menu.

i With "Adr = 0", the menu entries baud rate and parity are not shown in the menu and the IsoData protocol is activated.
With a valid bus address (i.e. not equal to 0), the menu item "baud rate" is displayed in the menu. The parameter value "---" for the baud rate indicates the activated BMS protocol. In this case, the baud rate for the BMS protocol is set to 9600 baud. If the baud rate is set unequal to "---", the Modbus protocol with configurable baud rate is activated.

Operating elements

Device front	Operating elements	Function
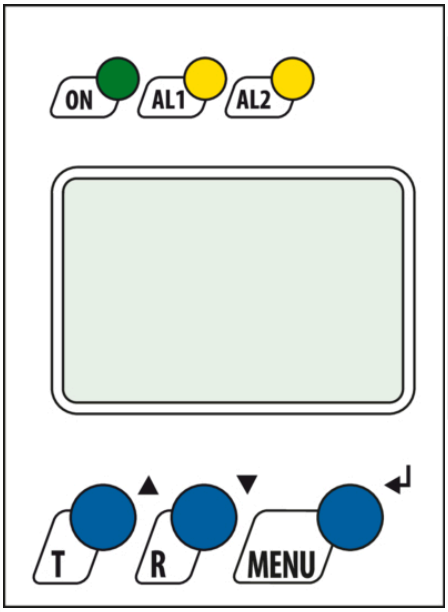	**ON**	Power LED
	AL1 AL2	Alarm LEDs
	▲▼	Up and down buttons – For navigating up or down in the menu settings. – For increasing or decreasing values.
	T	Test button (press > 1.5 s)
	R	Reset button (press > 1.5 s)
	↵	Enter button – Select menu item. – Save value.
	MENU	MENU button (press > 1.5 s) – Starts menu mode. – Exits menu item without saving changes.

Connection

Wiring diagram legend:

Terminal	Connections
A1, A2	Connection to the supply voltage U_s via fuse: If supplied from an IT system, both lines have to be protected by a fuse.*
E, E, KE	Connect each terminal separately to PE: Use the same wire cross section as for “A1”, “A2”.
L1/+, L2/–	Connection to IT system to be monitored
Up, AK1, GND, AK2	Connect the terminals of the AGH to the corresponding terminals of the ISOMETER®.
T/R	Connection for external combined test and reset button
11, 14	Connection to alarm relay “K1”
11, 24	Connection to alarm relay “K2”
A, B	RS-485 communication interface with selectable terminating resistance

*** For UL and CSA applications:**

Feed the supply voltage U_S via 5 A back-up fuses.

For UL applications:

Only use 60/75 °C copper lines.

Wiring diagram

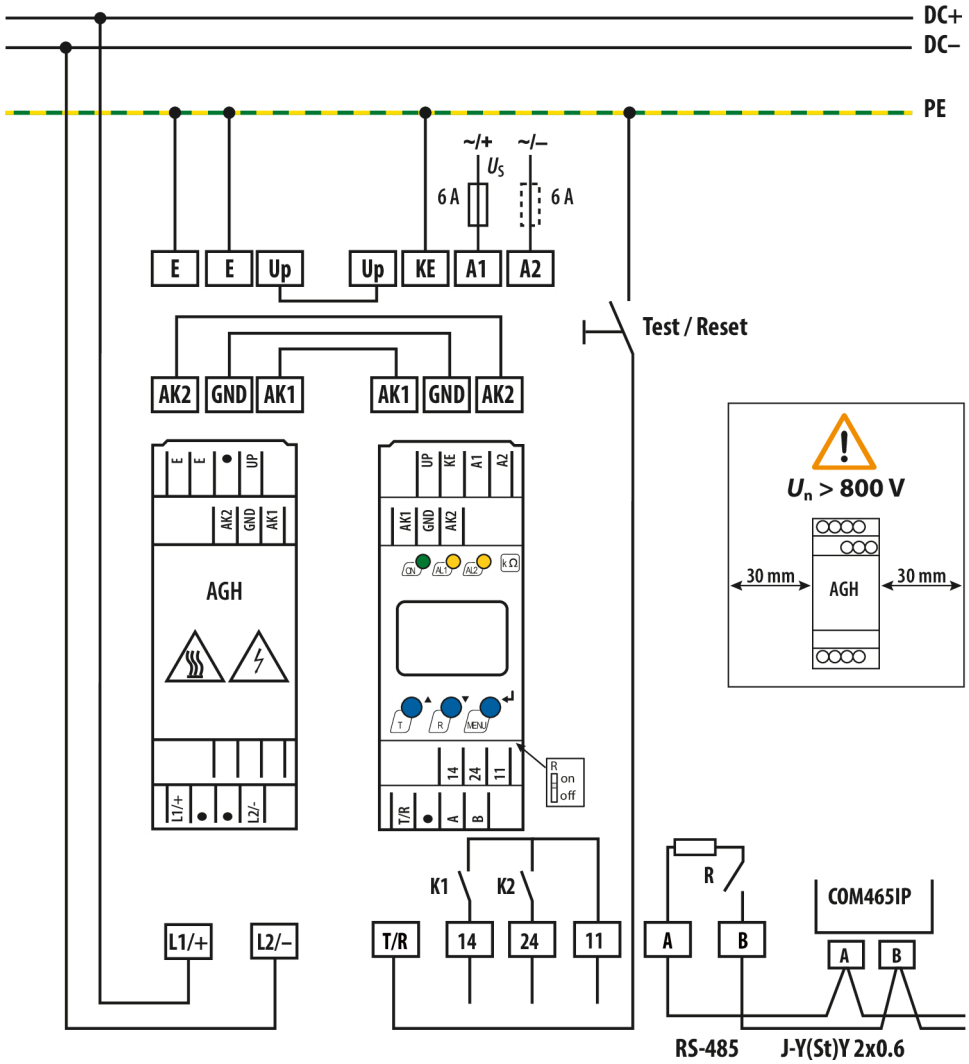

Technical data isoCHA425HV

( )* = factory settings

Insulation coordination acc. to IEC 60664-1/-3

Definitions	
Supply circuit (IC2)	A1, A2
Output circuit (IC3)	11, 14, 24
Control circuit (IC4)	Up, KE, T/R, A, B, AK1, GND, AK2
Rated voltage	240 V
Overvoltage category	III

Rated impulse voltage	
IC2/(IC3-4)	4 kV
IC3/IC4	4 kV

Rated insulation voltage	
IC2/(IC3-4)	250 V
IC3/IC4	250 V
Pollution degree	3

Protective separation (reinforced insulation) between	
IC2/(IC3–4)	overvoltage category III, 300 V
IC3/IC4	overvoltage category III, 300 V

Voltage tests (routine test) acc. to IEC 61010-1	
IC2/(IC3-4)	DC ± 3.1 kV
IC3/IC4	AC 2.2 kV

Supply voltage

Supply voltage U_s	AC 100…240 V / DC 24…240 V
Tolerance of U_s	–30…+15 %
Frequency range U_s	47…63 Hz
Power consumption	≤ 3 W, ≤ 9 VA

IT system being monitored

Nominal system voltage U_n with AGH420-1/ AGH421-1	DC 0…1000 V
Tolerance of U_n	+10 %
Nominal system voltage range U_n with AGH420-1/ AGH421-1 (UL 508)	DC 0…600 V

Response values

Response value R_{an1}	R_{an2}…600 kΩ (600 kΩ)*
Response value R_{an2}	5 kΩ…R_{an1} (120 kΩ)*
Hysteresis R_{an}	25 %, > 1 kΩ
Undervoltage detection U <	10…1090 V (off)*
Overvoltage detection U >	11…1100 V (off)*
Overload detection U >	1200 V (cannot be deactivated)
Hysteresis U	5 %, > 5 V

System voltage

Measuring range	DC ±1200 V
Display range	0 V…1.2 kV (measurement True-RMS)
Measurement and relative uncertainty	±5 %, > ± 5 V

Mode CCS (dc)

Permissible system leakage capacitance C_e	≤ 20 µF
Permissible system leakage capacitance C_e acc. to UL 2231-1/-2	≤ 10 µF
Measuring and display range R_F	1 kΩ … 2 MΩ
Measurement uncertainty R_F / relative uncertainty R_{an}	
C_e ≤ 5 µF	±15 %, ±2 kΩ
C_e > 5 µF and R_F >100 kΩ	±(5 % × R_{an} / 100 kΩ + 10 %)
Measuring and display range C_e	0…35 µF
Measurement uncertainty C_e	
R_F < 10 kΩ	no measurement
R_F ≥ 10 kΩ	±15 %, ±0.1 µF
Response time t_{an}	
R_{an} = 2.0 × R_F and C_e = 1 µF acc. to IEC 61557-8	≤ 10 s
R_{an} = 2.0 × R_F and C_e ≤ 5 µF or R_F ≤ 100 kΩ	≤ 10 s

Mode CHAdeMO (CHd and CHA)

System voltage U_n	measurement from U_n ≥ DC 50 V
Permissible system leakage capacitance C_e	per conductor ≤ 1.6 µF
One-pole fault R_{FU}	
Measuring and display range R_{FU}	1 kΩ … 2 MΩ
Measurement uncertainty R_{FU} / relative uncertainty R_{an}	
U_n ≥ 100 V and R_{FU} ≤ 200 kΩ	±15 %, ±2 kΩ
U_n ≥ 200 V	±15 %, ±2 kΩ
Two-pole fault R_{FS} (only CHd Mode)	
Measuring and display range R_{FS}	1…160 kΩ
Measurement uncertainty R_{FS} / relative uncertainty R_{an}	
< 160 kΩ	±15 %, ± 2 kΩ
Measuring and display range C_e	0…35 µF
Measurement uncertainty C_e	
R_F < 10 kΩ	no measurement
R_F ≥ 10 kΩ	±15 %, ±0.1 µF
Response time t_{an}	
R_{an} = 1.2 × R_{FU} and R_{FU} ≤ 100 kΩ and U_n > 100 V	≤ 1 s
R_{an} = 1.2 × R_F	≤ 10 s

Displays, memory

Password	off / 0…999 (off / 0)*
Fault memory alarm messages	on/(off)*
Display	LC display, multifunctional, not illuminated

Time response

Start-up delay t	0…10 s (0 s)*
Response delay t_{on}	0…99 s (0 s)*
Delay on release t_{off}	0…99 s (0 s)*

Interface

Interface / protocol	RS-485 / BMS, Modbus RTU, isoData
Baud rate	BMS (9.6 kBit/s), Modbus RTU (selectable), isoData (115.2 kBits/s)
Cable length (9.6 kBits/s)	≤ 1200 m
Cable: twisted pairs	min. J-Y(St)Y 2 × 0.6
Terminating resistor	120 Ω (0.25 W), internal, can be connected
Device address, BMS bus, Modbus RTU	3…90 (3)*

Switching elements

Switching elements	2 × 1 n/o contact, common terminal 11
Operating principle	n/c operation, n/o operation (n/c operation)*
Electrical endurance under rated operating conditions	10,000 cycles

Contact data acc. to IEC 60947-5-1

Utilisation category	AC-12 / AC-14 / DC-12 / DC-12 / DC-12
Rated operational voltage	230 V / 230 V / 24 V / 110 V / 220 V
Rated operational current	5 A / 2 A / 1 A / 0.2 A / 0.1 A
Minimum contact load	1 mA at DC ≥ 5 V

Contact data acc. to UL 508

Rated operational voltage	AC 250 V
Rated operational current	2 A

Environment/EMC

EMC	IEC 61326-2-4; IEC 61851-21-2:2018-04 Ed. 1.0

Ambient temperatures

Operation	–40…+70 °C[1]
Transport	–40…+85 °C
Storage	–40…+70 °C

1) Below –25 °C the readability of the display is limited.

Classification of climatic conditions acc. to IEC 60721 (related to temperature and relative humidity)

Stationary use (IEC 60721-3-3)	3K22
Transport (IEC 60721-3-2)	2K11
Long-term storage (IEC 60721-3-1)	1K22

Classification of mechanical conditions acc. to IEC 60721

Stationary use (IEC 60721-3-3)	3M11
Transport (IEC 60721-3-2)	2M4
Long-term storage (IEC 60721-3-1)	1M12

Other

Operating mode	continuous operation
Mounting	cooling slots must be ventilated vertically
Degree of protection, built-in components (DIN EN 60529)	IP30
Degree of protection, terminals (DIN EN 60529)	IP20
Enclosure material	polycarbonate
DIN rail mounting acc. to	IEC 60715
Screw mounting	2 × M4 with mounting clip
Weight	≤ 150 g

Technical data AGH420-1 and AGH421-1

Insulation coordination acc. to IEC 60664-1/-3

Definitions

Measuring circuit (IC1)	L1/+, L2/–
Control circuit (IC2)	AK1, GND, AK2, Up, E
Rated voltage	1000 V
Overvoltage category	III

Rated impulse voltage

IC1/IC2	8 kV

Rated insulated voltage

IC1/IC2	1000 V
Polution degree	3

Protective separation (protective impedance) between

IC1/IC2	Overvoltage category III, 1000 V

Monitored IT system

Nominal system voltage range U_n	DC 0…1000 V
Tolerance of U_n	+10 %
Nominal system voltage range U_n (UL 508)	DC 0…600 V

Measuring circuit

Measuring voltage U_m	±45 V
Measuring current I_m at $R_F = 0\ \Omega$	≤ 400 µA
Internal resistance R_i	≥ 120 kΩ

Environment/EMC

EMC	IEC 61326-2-4

Ambient temperatures

Operation	–40…+70 °C
Transport	–40…+85 °C
Storage	–40…+70 °C

Classification of climatic conditions acc. to IEC 60721 (related to temperature and relative humidity)

Stationary use (IEC 60721-3-3)	3K22
Transport (IEC 60721-3-2)	2K11
Long-term storage (IEC 60721-3-1)	1K22

Classification of mechanical conditions acc. to IEC 60721

Stationary use (IEC 60721-3-3)	3M11
Transport (IEC 60721-3-2)	2M4
Long-term storage (IEC 60721-3-1)	1M12

Other

Operating mode	continuous operation
Mounting	cooling slots must be ventilated vertically
Distance to adjacent devices from U_n > 800 V	≥ 30 mm
Degree of protection internal components (DIN EN 60529)	IP30
Degree of protection terminals (DIN EN 60529)	IP20
Enclosure material	polycarbonate
DIN rail mounting acc. to	IEC 60715
Screw mounting	2 x M4 with mounting clip
Weight	≤ 150 g

Connection (for ISOMETER® and AGH)

Push-wire terminals

Nominal current	≤ 10 A
Conductor sizes	AWG 24…14
Stripping length	10 mm
Rigid	0.2…2.5 mm²
Flexible without ferrules	0.75…2.5 mm²
Flexible with ferrules with/without plastic sleeve	0.25…2.5 mm²
Multi-conductor flexible with TWIN ferrules with plastic sleeve	0.5…1.5 mm²
Opening force	50 N
Test opening	Ø 2.1 mm

Single cables for terminals Up, AK1, GND, AK2
Requirement for connecting cables between ISOMETER® and AGH

Cable lengths	≤ 0.5 m
Connection properties	≥ 0.75 mm²

Standards and certifications

The ISOMETER® was developed in compliance with the following standards:

- IEC 61851-23 Edition 1.0 2014-03
- IEC 61851-21-2: 2018-04 Version 1.0
- IEC 61557-8 Edition 3.0 2014-12
- DIN EN 61557-8:2015
- UL 2231-1 Edition 2 2012-09 Rev 2021-09
- UL 2231-2 Edition 2 2012-09 Rev 2020-12

EU Declaration of Conformity

Hereby, Bender GmbH & Co. KG declares that the device covered by the Radio Directive complies with Directive 2014/53/EU. The full text of the EU Declaration of Conformity is available at the following Internet address:

https://www.bender.de/fileadmin/content/Products/CE/CEKO_isoXX425.pdf

UKCA Declaration of Conformity

Hereby, Bender GmbH & Co. KG declares that this device is in compliance with Radio Equipment Regulations 2017 (S.I. 2017/1206). The full text of the UK declaration of conformity is available at the following internet address:

https://www.bender.de/fileadmin/content/Products/UKCA/UKCA_isoXX425.pdf

Ordering data

Type	Nominal voltage U_n	Article number	
		Set	Contents
isoCHA425HV-D4-4 + AGH420-1	CCS: DC 0…1000 V CHAdeMO: DC 50…1000 V	B71036396	B71036394 B78039033
isoCHA425HV-D4-4 + AGH421-1	CCS: DC 0…1000 V CHAdeMO: DC 50…1000 V	B71036399	B71036394 B78039034

Accessories

Description	Article number
Mounting clip for screw mounting	B98060008
XM420 mounting frame	B990994

Dimensions

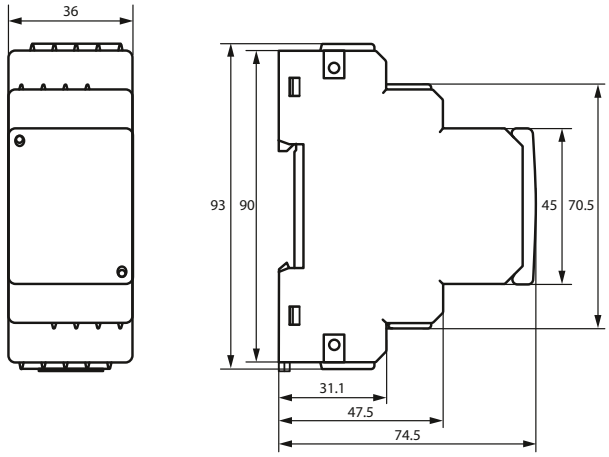

Dimension diagram (in mm)

Bender GmbH & Co. KG

Londorfer Straße 65
35305 Grünberg
Germany

Tel.: +49 6401 807-0
info@bender.de
www.bender.de

© Bender GmbH & Co. KG, Germany
Subject to change!
The specified standards take into account the edition valid until 11.2023 unless otherwise indicated.